GBM SHORING TOWER

PRODUCT **INFORMATION**

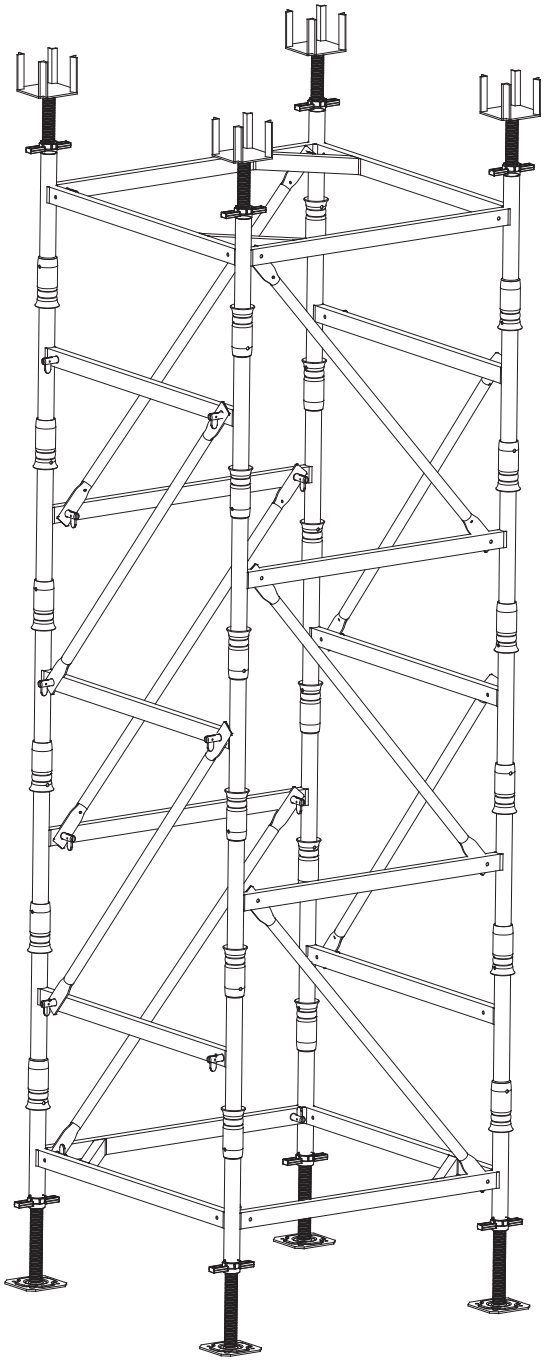

INDEX

INTRODUCTION

3 - STS 100 Tower

4 - Elements quantity calculation

5 - Loading Capacity

6 - Loading capacity diagram

7 - Distribution layout

STS 100 TOWER:

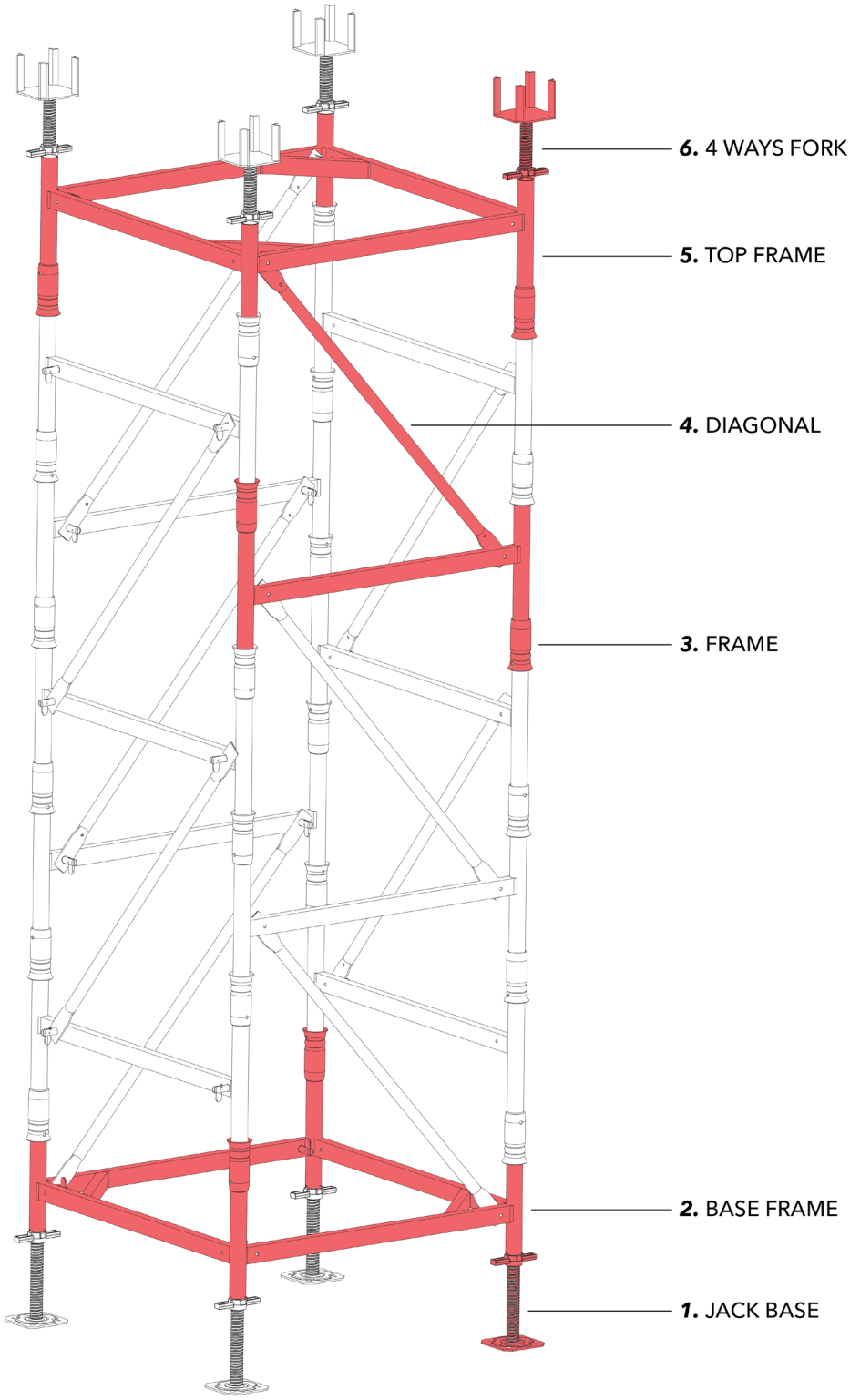

ELEMENTS QUANTITY CALCULATION:

HEIGHT*	FRAME	DIAGONAL	WEIGHT
1.75 - 2.30	4	4	93,72
2.25 - 2.80	6	6	107,58
2.75 - 3.30	8	8	121,44
3.25 - 3.80	10	10	135,30
3.75 - 4.30	12	12	149,16
4.25 - 4.80	14	14	163,02
4.75 - 5.30	16	16	176,88
5.25 - 5.80	18	18	190,74
5.75 - 6.30	20	20	204,60
6.25 - 6.80	22	22	218,46
6.75 - 7.30	24	24	232,32
7.25 - 7.80	26	26	246,18
7.75 - 8.30	28	28	260,04
8.25 - 8.80	30	30	273,90
8.75 - 9.30	32	32	287,76
9.25 - 9.80	34	34	301,62
9.75 - 10.30	36	36	315,48
10.25 - 10.80	38	38	329,34
10.75 - 11.30	40	40	343,20
11.25 - 11.80	42	42	357,06
11.75 - 12.30	44	44	370,92

*height includes base/top frames, base-plates and 4 ways forks

LOADING CAPACITY:

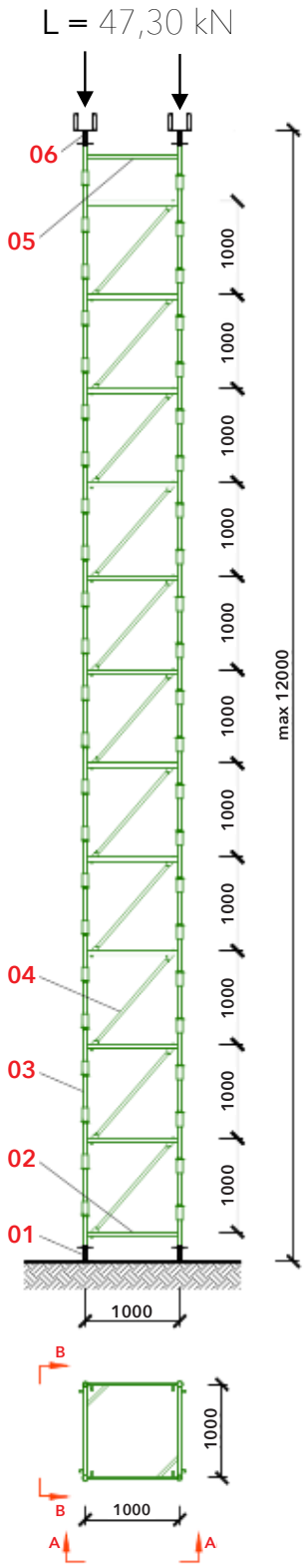

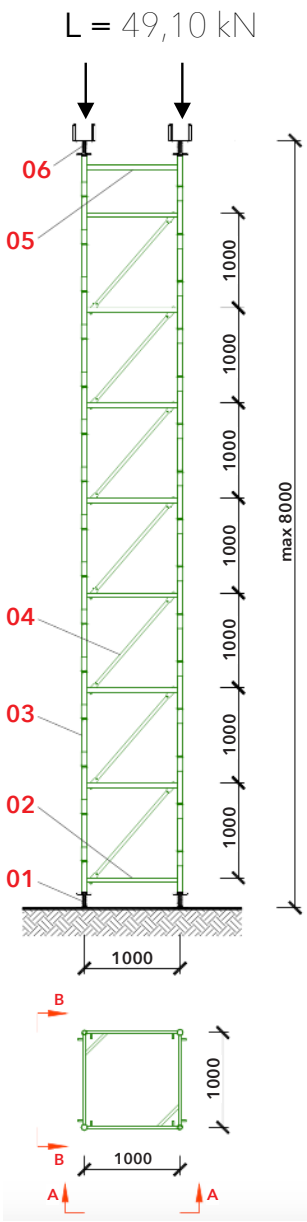

COMPONENTS:

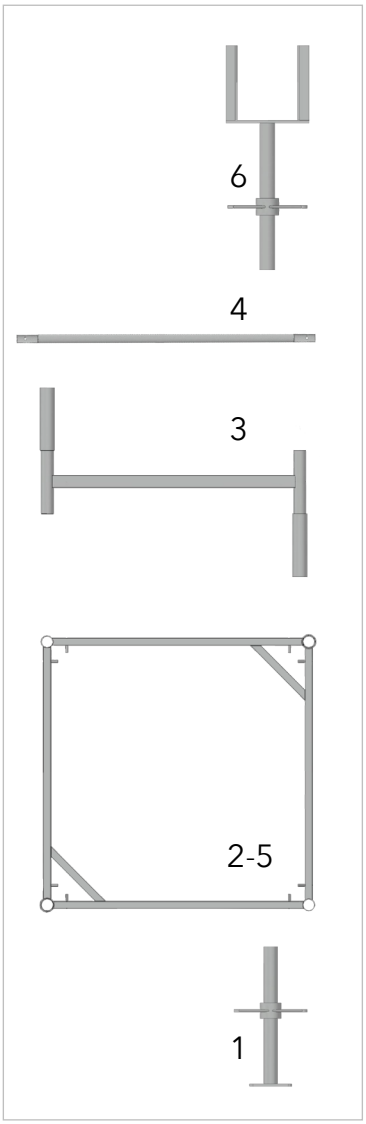

P - Max load on each upright

06 - Adjustable 4 ways fork 50 cm.
05 - Top frame
04 - Diagonal
03 - Frame
02 - Base frame
01 - Adjustable Jack base 50 cm

LOADING CAPACITY DIAGRAM

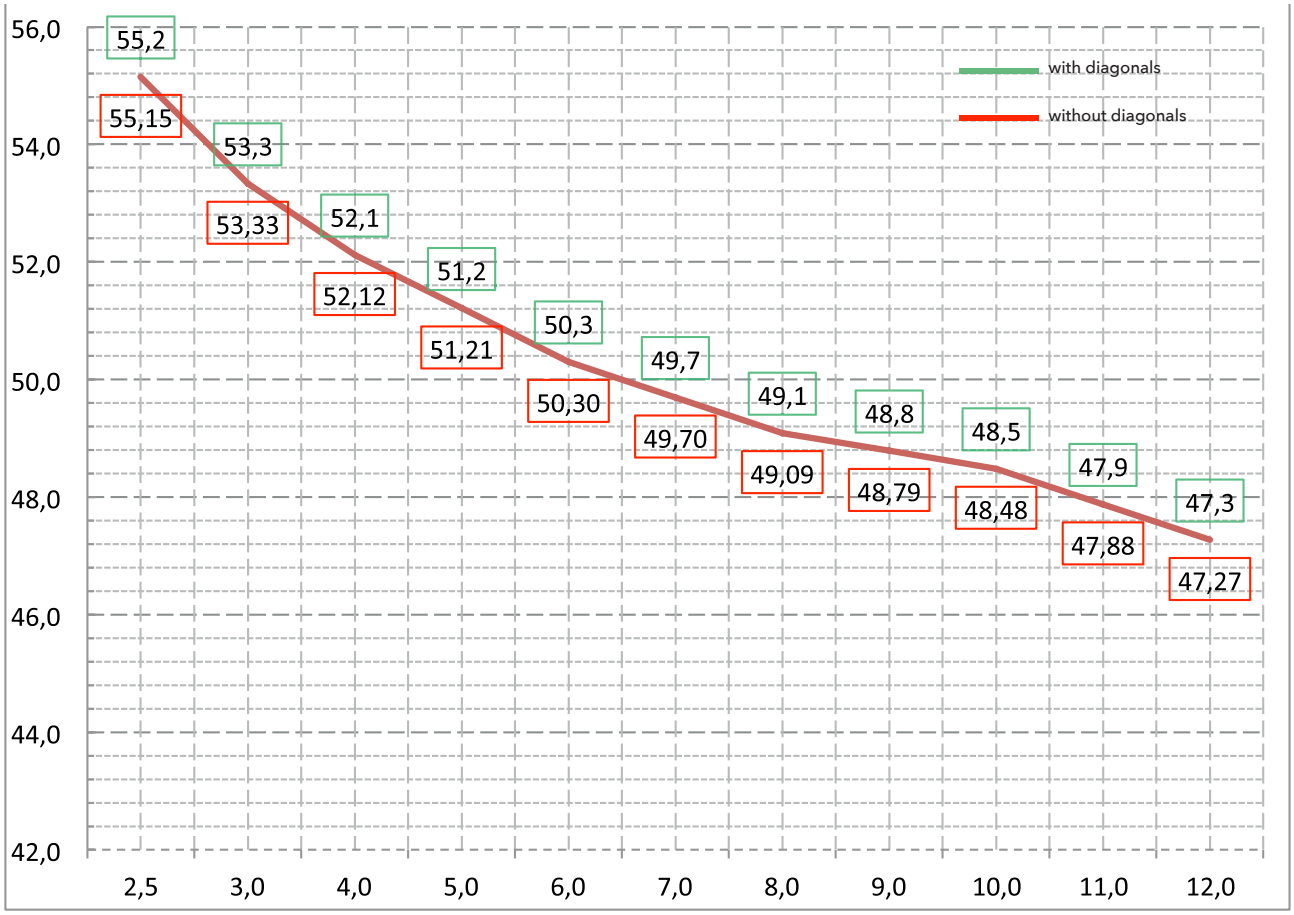

TOWER Loading capacity (kN) according to the tower height (m)

TOWER HEIGHT (m)	WITH DIAGONAL (kN)	WITHOUT DIAGONAL (kN)
2.50	55.2	55.15
3.00	53.3	53.33
4.00	52.1	52.12
5.00	51.2	51.21
6.00	50.3	50.30
7.00	49.7	49.70
8.00	49.1	49.09
9.00	48.8	48.79
10.00	48.5	48.48
11.00	47.9	47.88
12.00	47.3	47.27

DISTRIBUTION LAYOUT

The use of adequate primary and secondary beams to bear loads falls within the manufacturer's responsibility.

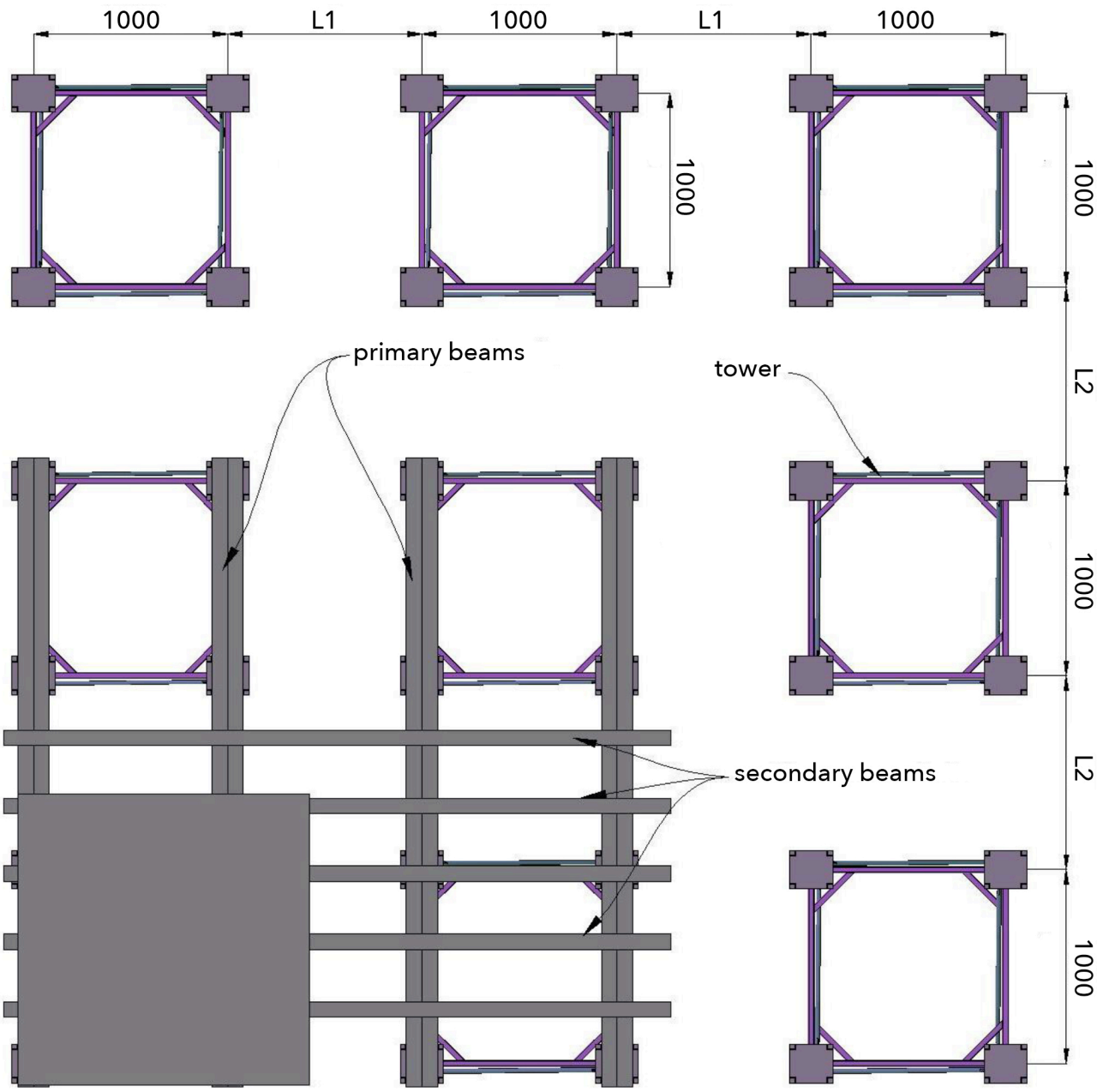

GBM
WORLDWIDE

G.B.M. BUILDING EQUIPMENT

G.B.M. Building Equipments S.R.L.
Via Alessandro Volta 1, Leno (BS)
25024, Italy
Tel. +39 0309067005
www.gbmitaly.com